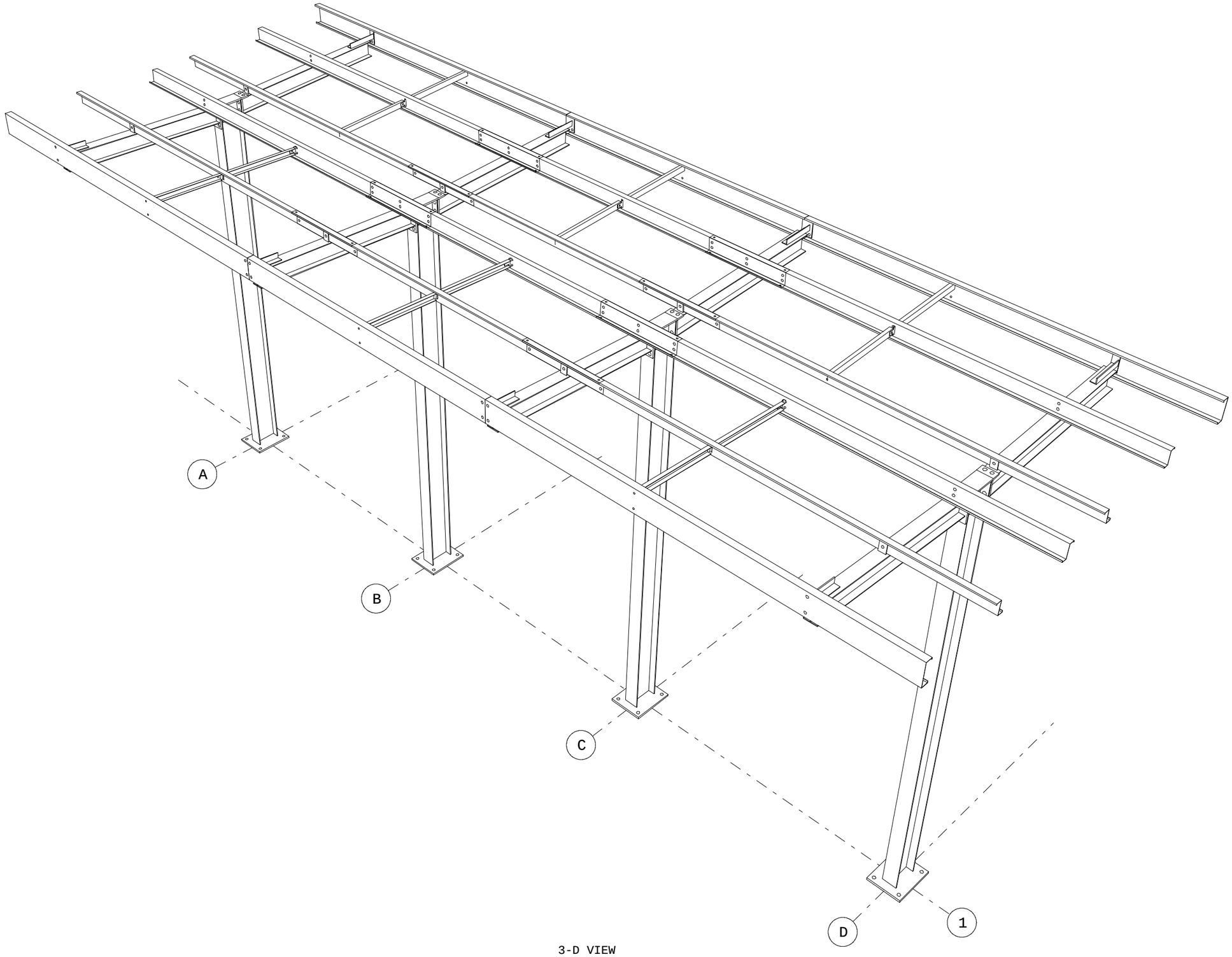

3-D VIEW

NOTES:
1. ALL HORIZONTAL MEMBERS ARE MARKED ON "TOP" FACE OF NORTH OR WEST END
2. * DENOTES MARKS ARE ON THE "TOP" FACE OF SOUTH OR EAST END
3. ALL PFC'S , FRAMES , HORIZ/VERT BRACING TO BE ERECTED WITH DIRECTION OF LEGS AS INDICATED ON PLANS OR ELEVATIONS.
4. ALL STAIRS ARE MARKED AT TOP END.
5. ALL COLUMNS ARE MARKED ON NORTH OR WEST FLANGE AT BASE END.
6. ALL FIN PLATES ARE ON THE NORTH AND WEST FACE OF CONNECTING BEAM U.O.N

STRUCAD

DRG No.	REFERENCE DRAWINGS
	MARKING PLAN
	ENGINEERING DWG

REV	DATE	AMENDMENT
E		
D		
C		
B		
A		

CLIENT

ACN 115921876 PAUL 0478 630 510

DRN	CHK	DATE	SCALE	SHEET
OC			NTS	A1

CONSTRUCTION

PROJECT
LPG FUEL CANOPY
280 BANNISTER ROAD
CANNING VALE WA

JOB NO.

MARKING PLAN

DRG NO. -

REV